Treetop Cat

Christmas Quilt Block



FINISHED SIZE

14 × 14 in

35.56 cm square

CONSTRUCTION

Fusible raw-edge appliqué on a single square of cotton.

PALETTE

Winter blues with a two-tone gold star.

Color inspiration / Sapphire, ice blue and old gold on ivory.

A cat, a bent bough and one falling star

Build the tree from the lowest bough upward. The blue pieces tuck under one another, the cat settles onto the bend, and the star meets the very last branch tip on the left.

Cuts 2 Technique 3–4 Map 5–9 Templates 10–13 Sizes 14

Fabric & cutting

All dimensions are in inches unless noted. Make one block. Use quilting cotton and a lightweight, sewable paper-backed fusible web.

BACKGROUND CUT
15 × 15
38.10 cm square

TRIM AFTER STITCHING
14 1/2 × 14 1/2
36.83 cm square

FINISHED IN A QUILT
14 × 14
35.56 cm square

What to set out

One ivory background square, the cotton scraps below, one 18 × 36 in sheet (or equivalent) of fusible web, coordinating thread, a removable fabric marker and a square ruler. A pressing sheet and small sharp scissors help with the star and ears.

Appliqué cutting list

Cut one fabric rectangle per ID. Width comes first. Each scrap includes working room.

ID	Fabric	Scrap (W × H)	Page
T	Honey brown	1 3/4 × 3 1/4	11
B1	Denim	6 × 2 1/2	10
B2	Sapphire	6 1/2 × 2 3/4	10
B3	Ice blue	6 1/4 × 3 1/2	10
B4	Midnight	5 3/4 × 3	11
B5	Denim	5 1/4 × 2 3/4	11
B6	Ice blue	4 1/2 × 2 3/4	11
B7	Sky blue	4 1/2 × 2 1/2	12
B8	Sapphire	4 × 2 1/2	12
B9	Ice blue	3 1/2 × 1 3/4	12
B10	Midnight	3 1/4 × 2 1/2	12

ID	Fabric	Scrap (W × H)	Page
B11	Sapphire	3 1/2 × 1 3/4	12
B12	Sky blue	2 1/4 × 2 1/4	12
H1	Sapphire	2 × 3 1/4	13
H2	Ice blue	1 3/4 × 2 3/4	13
H3	Denim	1 3/4 × 3 1/4	13
H4	Sky blue	1 3/4 × 3 1/4	13
H5	Midnight	2 1/4 × 3 3/4	13
K	Charcoal	3 × 2 3/4	13
S	Gold	2 1/2 × 2 1/2	13
F	Old gold	1 3/4 × 2 1/2	13

Which lines to cut

The rectangles above allow room to handle the fabric. Cut the actual shapes on the solid outlines on pages 10–13. Their overlaps are included. Page 14 lists each shape's actual width, height and position. The 1/4 in seam allowance belongs only to the background.

Print, trace and cut

Use US Letter or A4 paper in portrait orientation. Choose Actual Size or 100% and center the page. Turn off scaling such as Fit or Shrink.

1. Check the scale and assemble the map

1 inch

25.4 mm

Measure this square across and down. Both sides must be exactly 1 in (25.4 mm). Print pages 6–13 using the same settings. Each placement tile has a 7 × 7 in trim frame.

Cut around the four tile frames, butt the edges together and tape on the back. The top row is A beside B. The bottom row is C beside D. The joined map measures 14 × 14 in.

2. Mark the background

Fold the 15 in background in half each way and finger-press the center marks. Center the background over the front-view map, right side up. The fabric extends 1/2 in past all four edges of the map. Use a light source to transfer a few corners per piece with a removable marker. For opaque fabric, use dressmaker's transfer paper tested on a scrap.

3. Prepare the appliqués

Trace each template once on the smooth paper side of the fusible web. Write its ID on the paper. The templates are already reversed. Rough-cut just outside each outline, then fuse the web to the wrong side of its matching fabric using the web manufacturer's settings. Let it cool, cut on the solid line and peel away the paper.

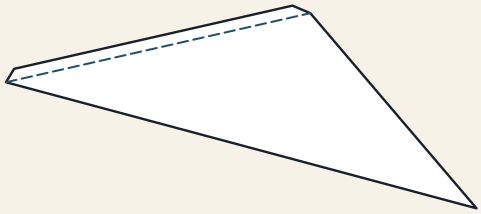

B4 template detail / reduced

HOW THE OVERLAP WORKS

On B1–B11, the dashed line marks where the next bough's lower edge lands. The narrow flap beyond it tucks underneath. Trace the solid outline. Use the dashed line to check placement.

Dry-lay the pieces before applying heat. Keep the paper map away from the iron.

Layer the tree

Use the numbered color key on page 5 and the full-size map on pages 6–9. The last two diagrams show the crown close up.

01 Trunk and lower boughs

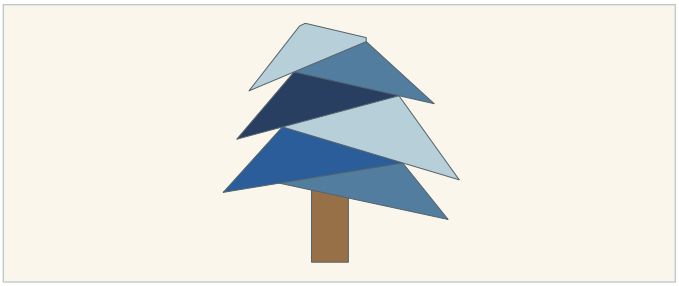

Lay T first. Add B1 through B6 in order. B1 covers the top of the trunk. Match each following bough to the map, covering the previous piece's dashed line.

02 Upper boughs

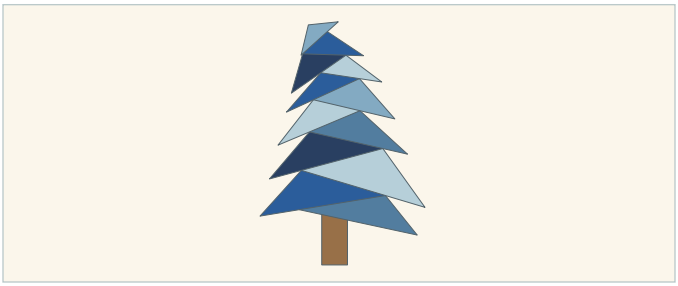

Add B7 through B12 in numerical order. B12 is the little sky-blue triangle at the turn. Its right-hand point sits just above the upper sapphire bough.

03 The drooping crown

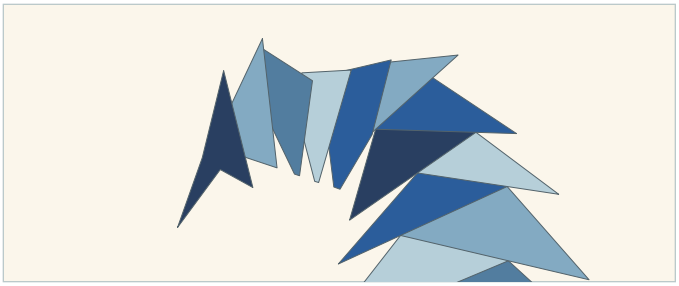

Place H1 near B12 and work left through H5. Let the pieces overlap at the top. Keep the ivory wedges open between the hanging tips.

04 Cat and folded star

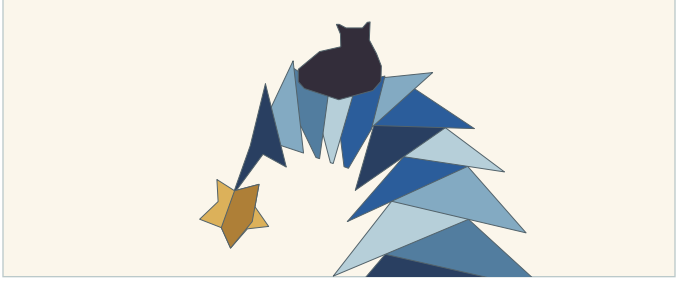

Place K over the upper edges of the crown. Put S over the tip of H5. Lay F on top of S, matching the upper-right point and the lower point of the star.

Fuse, edge-stitch and trim

Compare with the full map. Fuse on a protected pressing surface and let the block cool flat. Secure the exposed edges with matching thread and a narrow zigzag or small blanket stitch. Turn slowly at the ears, the bough tips and the star.

Center the ruler on the original folds and trim to 14 1/2 × 14 1/2 in. The finished design line lies 1/4 in inside each raw edge. Sew into your project with 1/4 in seams for a finished 14 × 14 in block.

Placement and color key

The star hangs to the left of the trunk when viewed from the front. IDs on this map match the fabric chart and full-size templates.



14 in finished / reduced map

Read the block from back to front

T is the trunk. B1–B12 are the alternating boughs. H1–H5 shape the bent crown. K is the cat, S the whole star and F the darker star facet. The solid black-and-white outlines on the next four pages show the visible edges after layering.

Full-size map order Top A + B Bottom C + D

Placement tile A

Upper Left

FRONT VIEW / Cut around the 7 × 7 in outer frame. Butt edges and tape on the back.

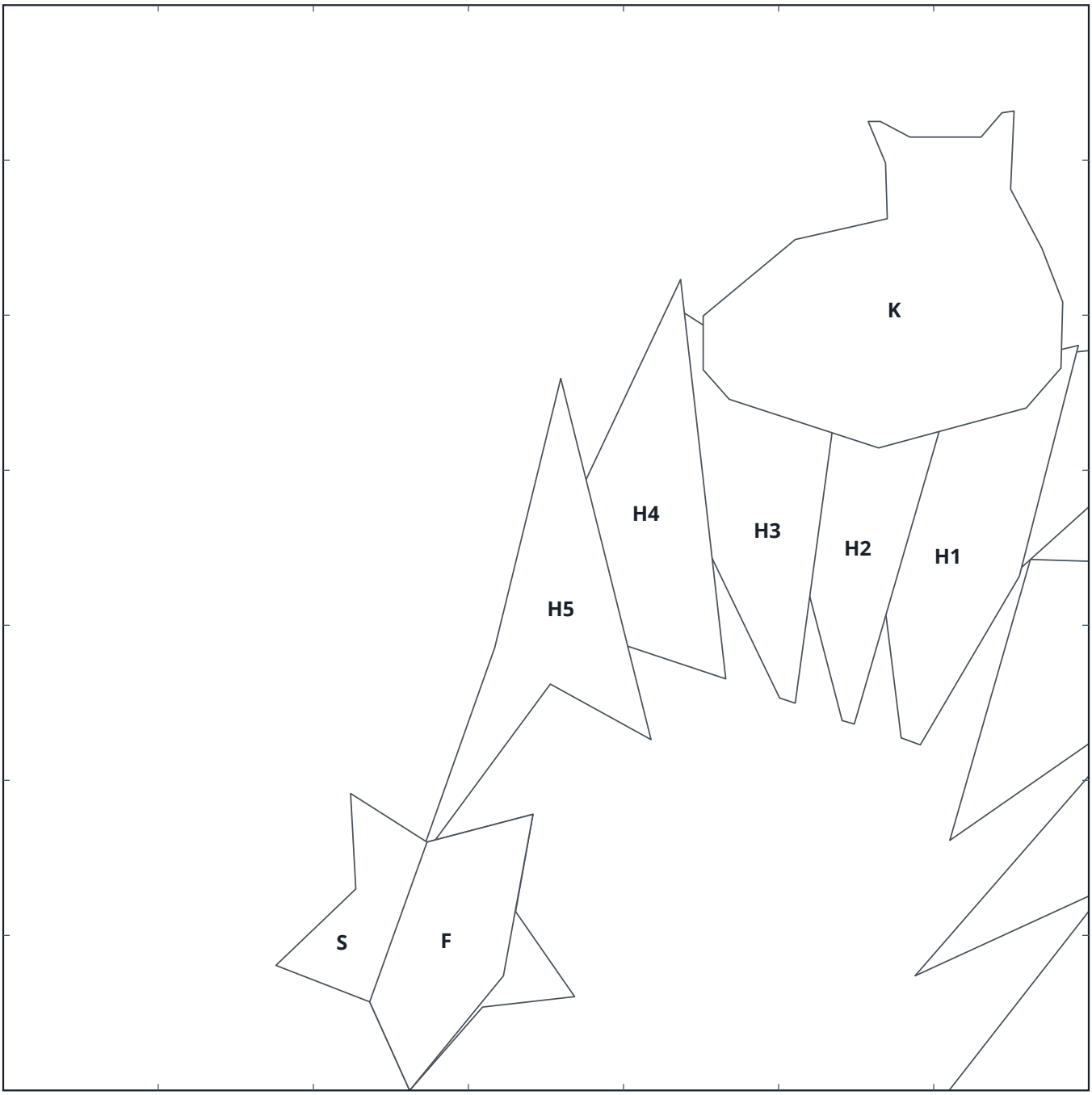

JOIN THIS TILE

B to the right and C below.

1 in / 25.4 mm

The frame marks the finished design area. Allow 1/4 in outside it on the trimmed fabric.

Placement tile B

Upper Right

FRONT VIEW / Cut around the 7 × 7 in outer frame. Butt edges and tape on the back.

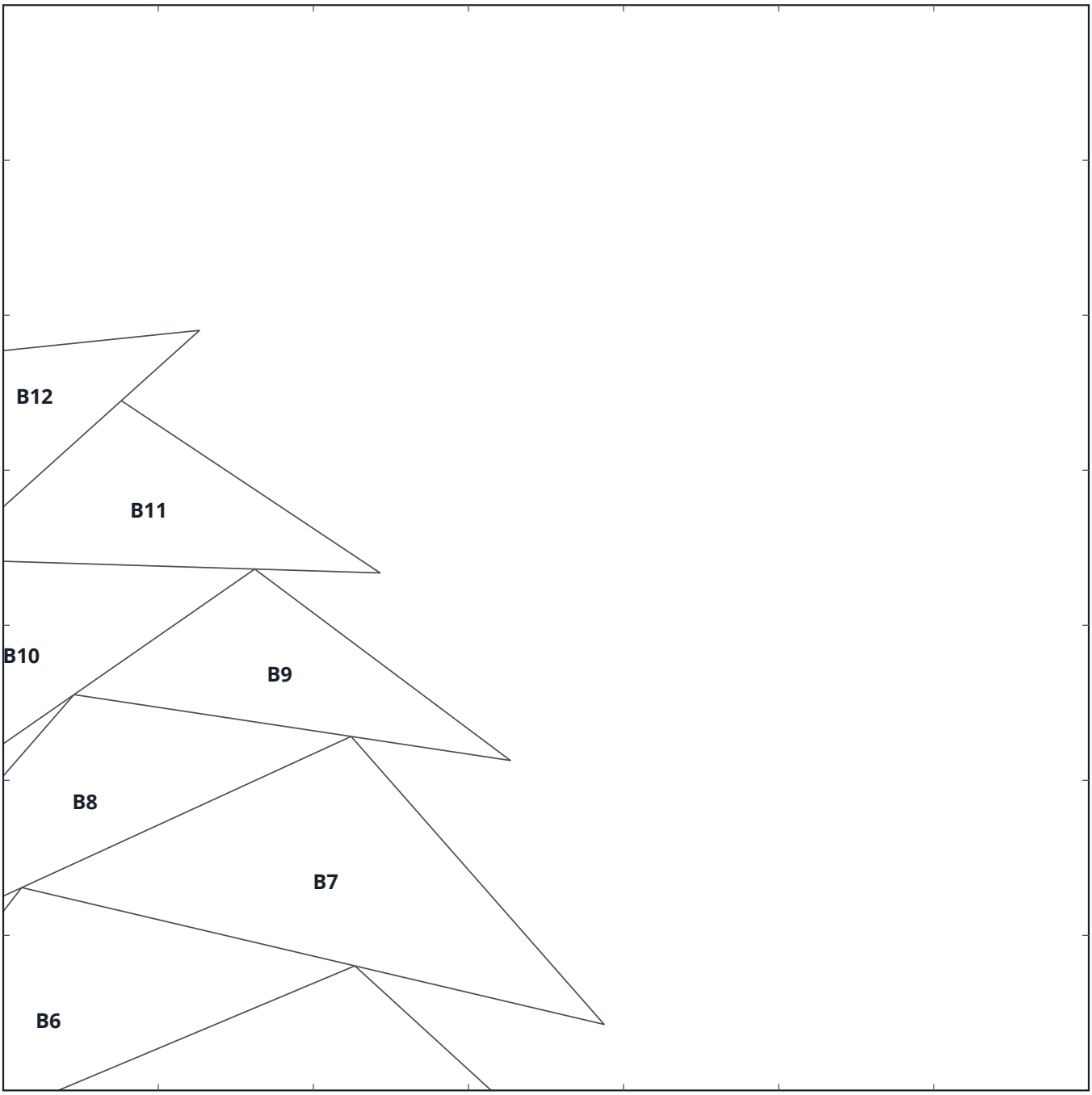

JOIN THIS TILE

A to the left and D below.

1 in / 25.4 mm

The frame marks the finished design area. Allow 1/4 in outside it on the trimmed fabric.

Placement tile C

Lower Left

FRONT VIEW / Cut around the 7 × 7 in outer frame. Butt edges and tape on the back.

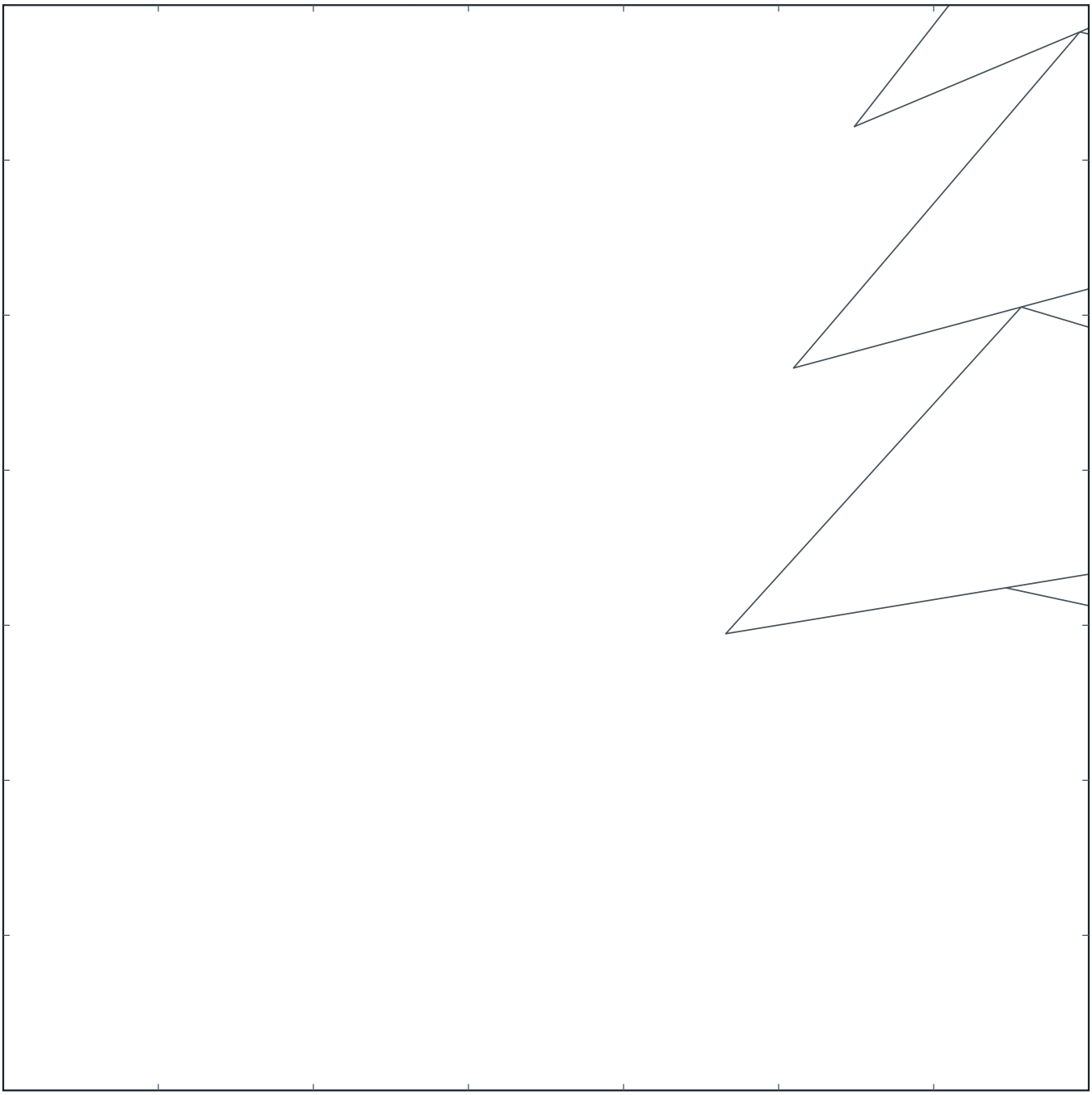

JOIN THIS TILE

A above and D to the right.

1 in / 25.4 mm

The frame marks the finished design area. Allow 1/4 in outside it on the trimmed fabric.

Placement tile D

Lower Right

FRONT VIEW / Cut around the 7 × 7 in outer frame. Butt edges and tape on the back.

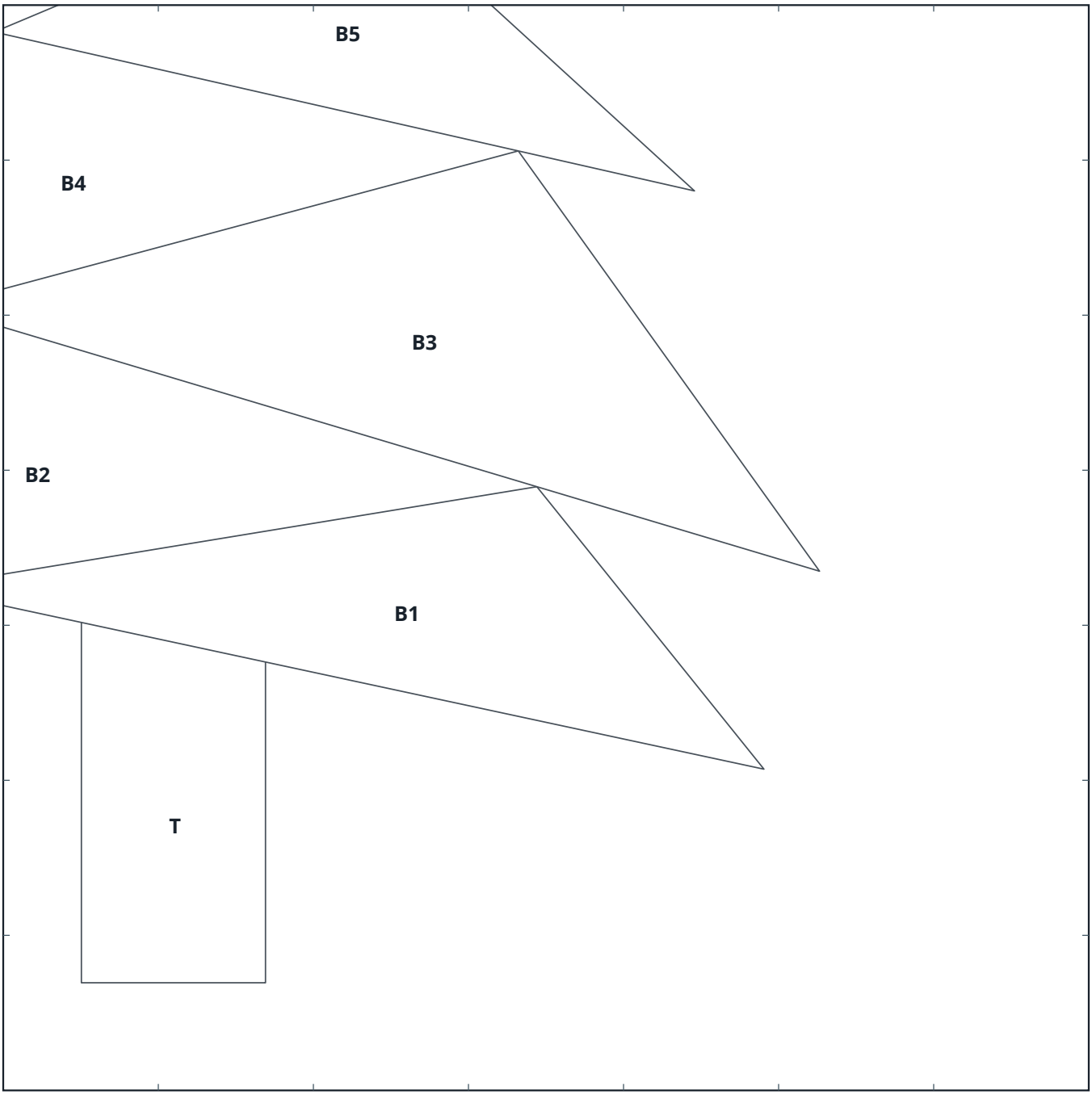

JOIN THIS TILE

B above and C to the left.

1 in / 25.4 mm

The frame marks the finished design area. Allow 1/4 in outside it on the trimmed fabric.

Mirrored templates

1 of 4 / Lower boughs

Paper side up. Trace one of each. Cut on solid lines. Dashes mark the bough underlaps.

B3 / Ice blue

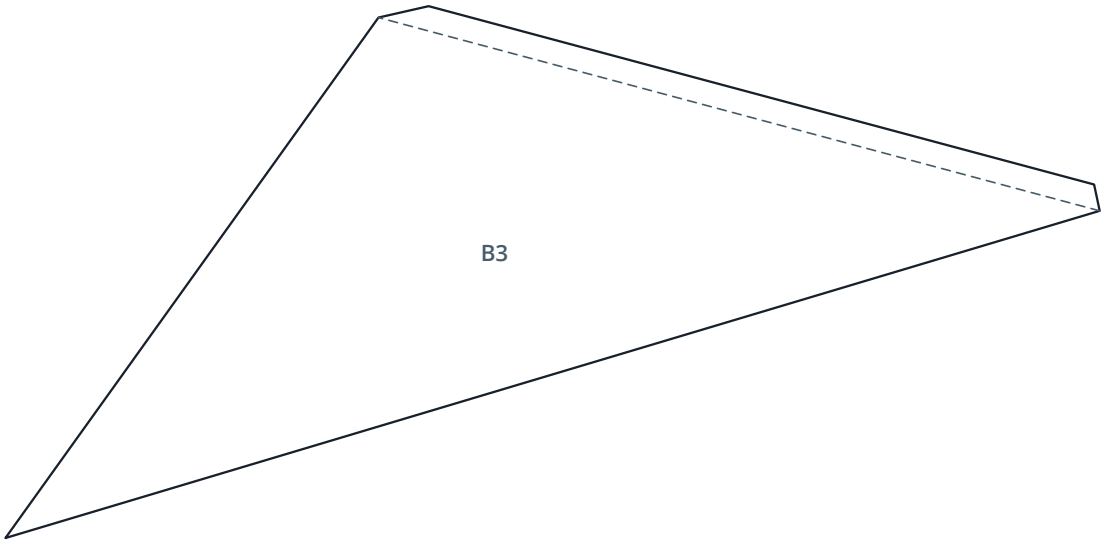

B2 / Sapphire

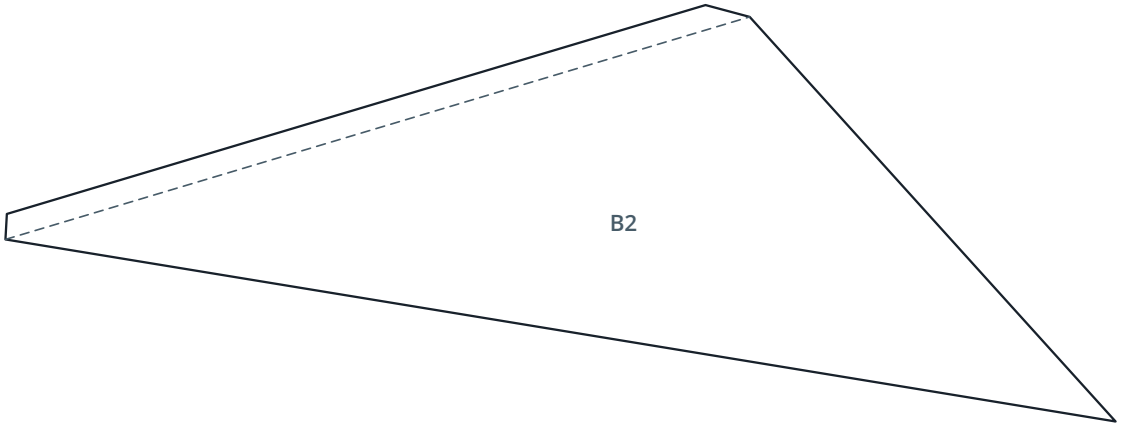

B1 / Denim

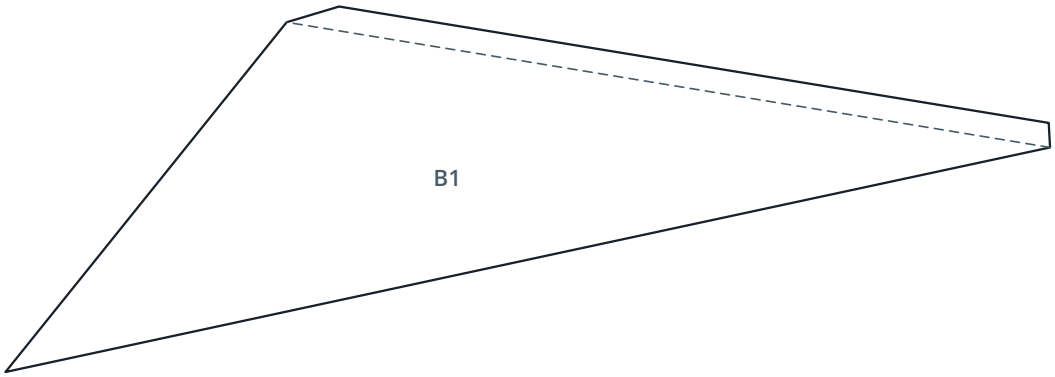

Actual size / 100% • Do not flip these templates again.

1 in / 25.4 mm

Mirrored templates

2 of 4 / Trunk and middle boughs

Paper side up. Trace one of each. Cut on solid lines. Dashes mark the bough underlaps.

T / Honey brown

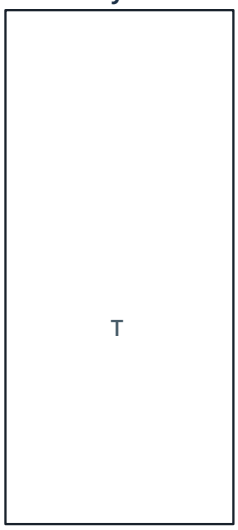

B4 / Midnight

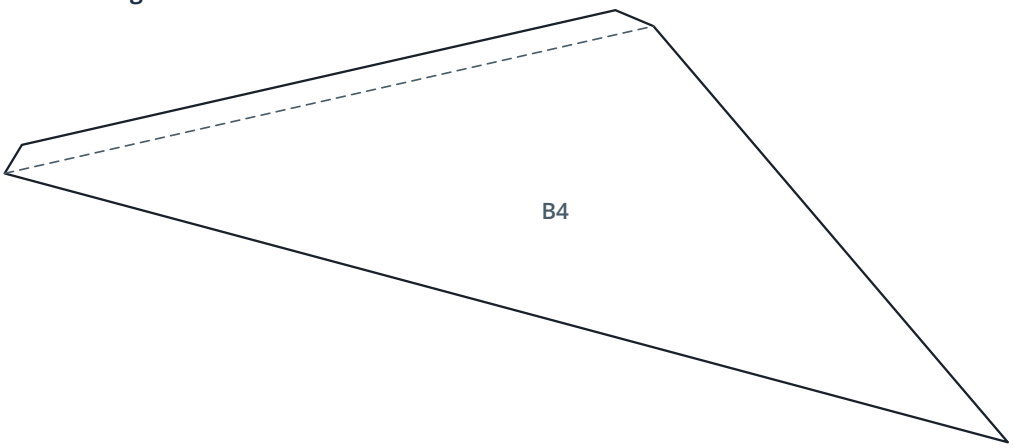

B6 / Ice blue

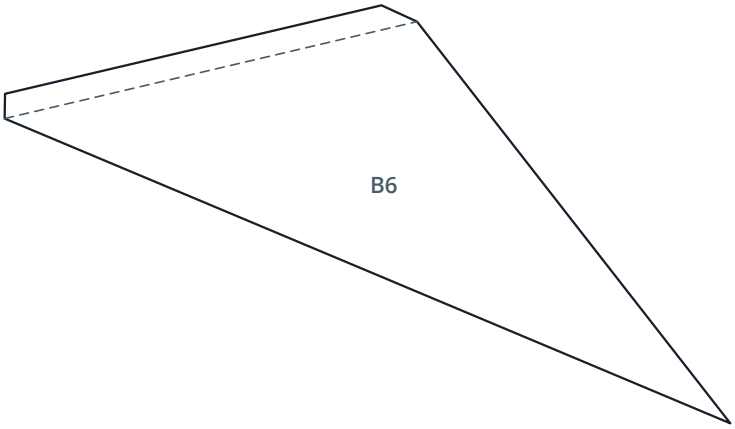

B5 / Denim

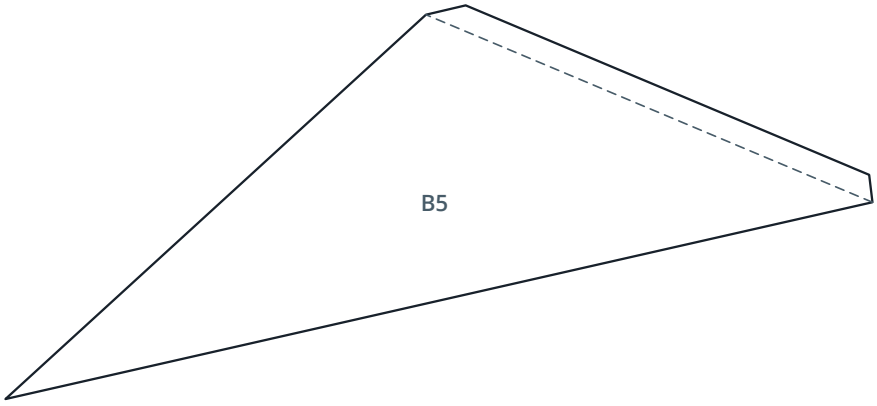

Actual size / 100% • Do not flip these templates again.

1 in / 25.4 mm

Mirrored templates

3 of 4 / Upper boughs

Paper side up. Trace one of each. Cut on solid lines. Dashes mark the bough underlaps.

B10 / Midnight

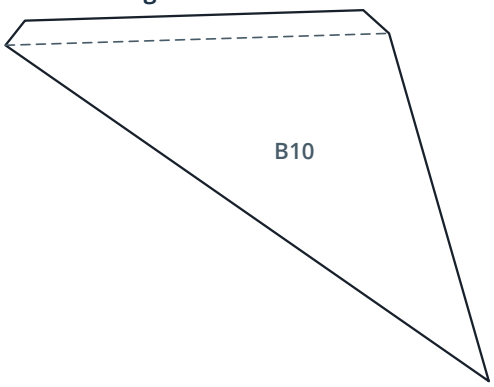

B8 / Sapphire

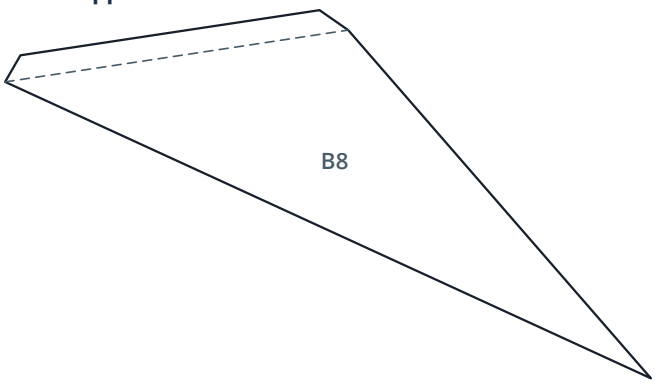

B12 / Sky blue

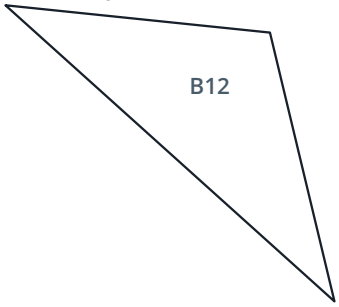

B7 / Sky blue

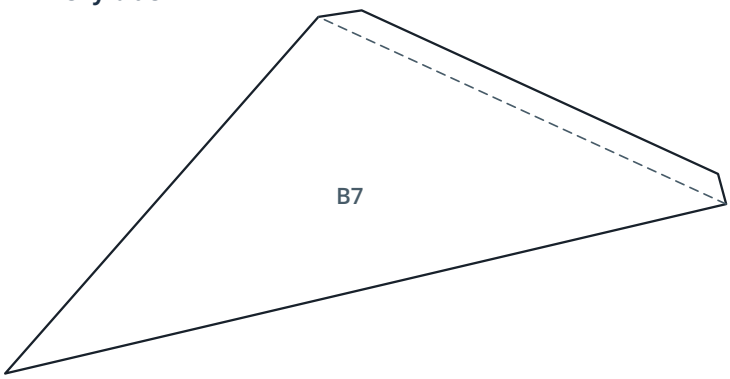

B9 / Ice blue

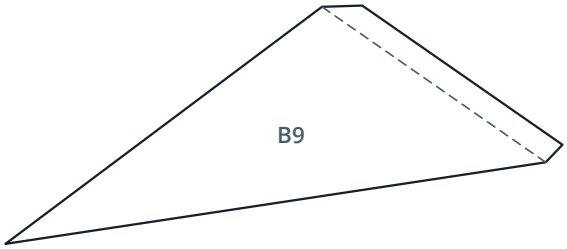

B11 / Sapphire

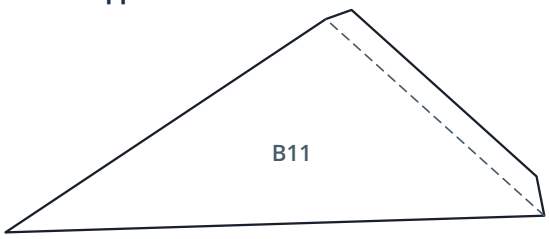

Actual size / 100% • Do not flip these templates again.

1 in / 25.4 mm

Mirrored templates

4 of 4 / Crown, cat and star

Paper side up. Trace one of each. Cut on solid lines. Dashes mark the bough underlaps.

H5 / Midnight

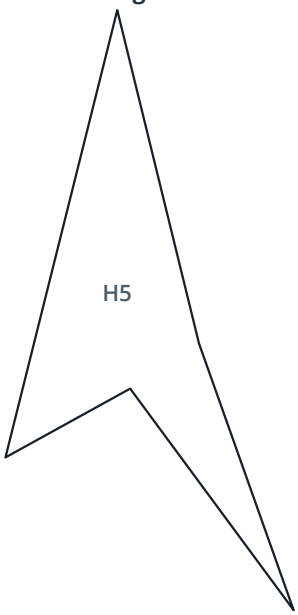

H3 / Denim

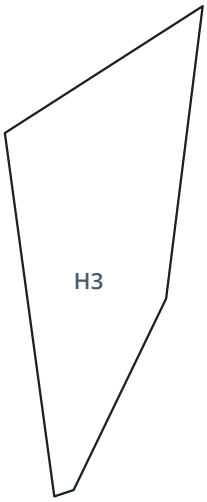

S / Gold

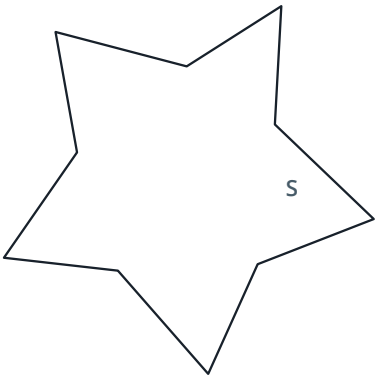

F / Old gold

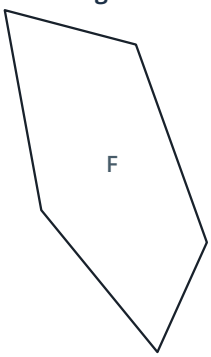

H2 / Ice blue

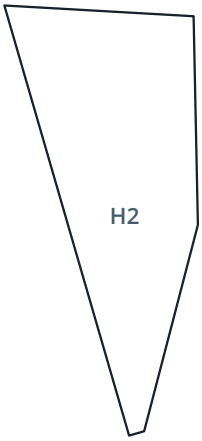

H1 / Sapphire

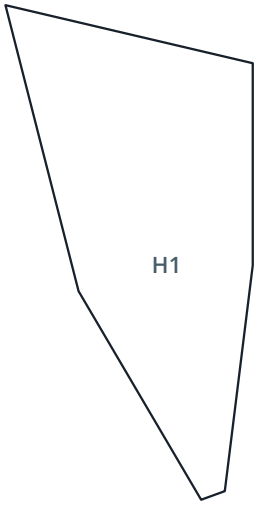

H4 / Sky blue

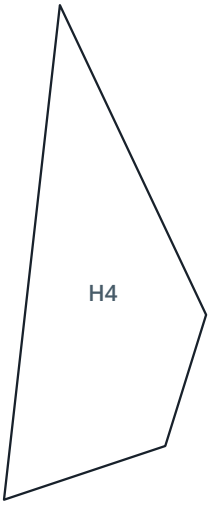

K / Charcoal

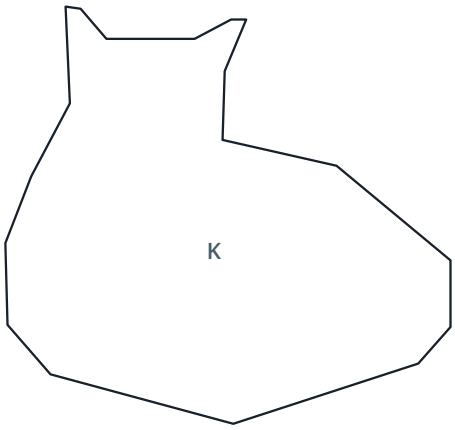

Actual size / 100% • Do not flip these templates again.

1 in / 25.4 mm

Shape sizes and positions

These measurements check the full cut shapes, including hidden overlaps. Measure across the widest part and from the topmost to the lowest point. All values are in inches, rounded to the nearest 0.01 in.

Measure on the front-view map

Left and top are distances from the upper-left corner of the 14 in finished square to the leftmost and uppermost edges of each shape. The template sheet shows its mirror image. Use the solid outlines for cutting.

ID	Fabric	Cut width	Cut height	From left	From top
T	Honey brown	1.19	2.68	7.50	10.63
B1	Denim	5.44	1.90	6.46	10.02
B2	Sapphire	5.78	2.17	4.66	8.89
B3	Ice blue	5.70	2.77	6.56	7.88
B4	Midnight	5.23	2.25	5.10	7.09
B5	Denim	4.52	2.05	6.94	6.15
B6	Ice blue	3.78	2.18	5.49	5.61
B7	Sky blue	3.76	1.89	7.12	4.68
B8	Sapphire	3.36	1.92	5.88	4.34
B9	Ice blue	2.90	1.24	7.37	3.63
B10	Midnight	2.52	1.93	6.10	3.45
B11	Sapphire	2.81	1.16	6.62	2.50
B12	Sky blue	1.71	1.54	6.55	2.10
H1	Sapphire	1.29	2.58	5.64	2.20
H2	Ice blue	1.01	2.24	5.13	2.40
H3	Denim	1.03	2.55	4.33	1.95
H4	Sky blue	1.05	2.58	3.61	1.77
H5	Midnight	1.50	3.12	2.68	2.41
K	Charcoal	2.32	2.17	4.51	0.68
S	Gold	1.93	1.92	1.76	5.08
F	Old gold	1.05	1.78	2.36	5.22

Whole motif check. From the left star point to the widest right bough, the design spans 10.51 in. From the cat's ear to the base of the trunk it stands 12.62 in. Center the finished square on the background before marking.